HIGHLEAD

# GC2698-1/GC2698-1B

CYLINDER-BED UNISON FEED SEWING MACHINE

# Parts Catalog

SHANGHAI HUIGONG NO.3 SEWING MACHINE FACTORY

## A. ARM BED AND ITS ACCESSORIES (1)

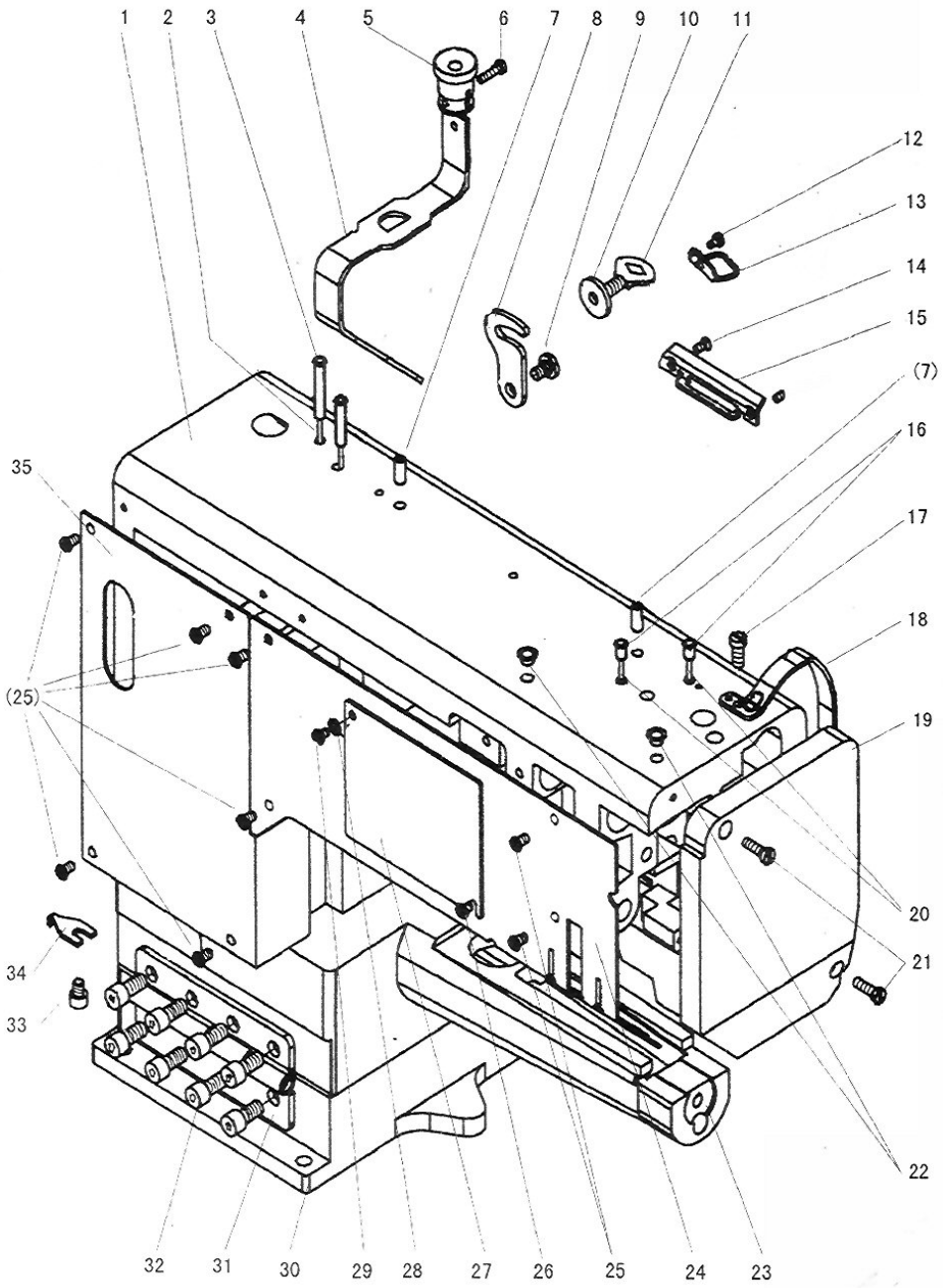

## A. ARM BED AND ITS ACCESSORIES (2)

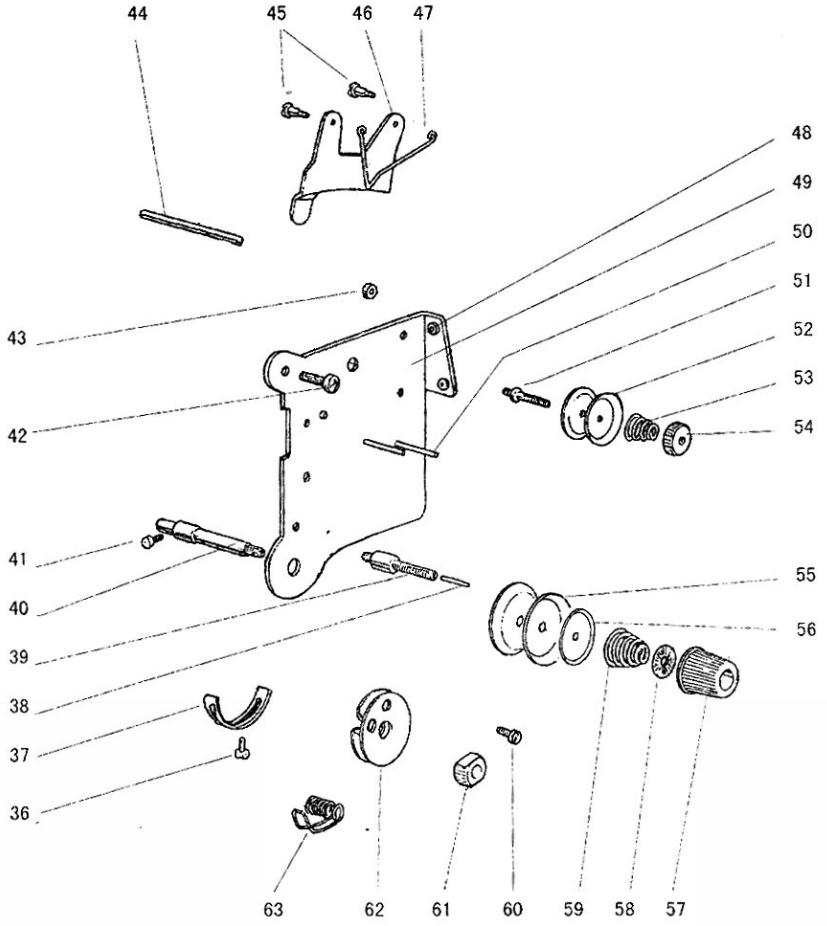

## A. ARM BED AND ITS ACCESSORIES

| Fig. No. | Part No. | Description | Pcs. | Remarks |
|---|---|---|---|---|
| A01 | H7307B8001 | Arm | 1 | |
| A02 | H7331B8001 | Oil wick | 2 | |
| A03 | H7330B8001 | Oil pipe | 2 | |
| A04 | H7326B8001 | Felt | 1 | |
| A05 | H7327B8001 | Holder | 1 | |
| A06 | H401040160 | Screw | 1 | GB/T65 M4×16 |
| A07 | H7334B8001 | Oil pipe | 2 | |
| A08 | H4100B2060 | Link plate | 1 | |
| A09 | H4100B2070 | Screw | 1 | SM1/4(24)×5.7 |
| A10 | H4100B2090 | Washer | 1 | |
| A11 | H4100B2080 | Screw | 1 | SM1/4(24)×20 |
| A12 | HA700B2060 | Screw | 1 | SM11/64(40)×8 |
| A13 | H7335B8001 | Thread guide | 1 | |
| A14 | H7322B8001 | Screw | 2 | M4×6 |
| A15 | H7321B8001 | Thread guide | 1 | |
| A16 | H7328B8001 | Oil pipe | 2 | |
| A17 | HA300C2030 | Screw | 1 | SM11/64(40)×8 |
| A18 | H3200B2050 | Thread take-up cover | 1 | |
| A19 | H7319B8001 | Face plate | 1 | |
| A20 | H7329B8001 | Oil wick | 2 | |
| A21 | H401050160 | Screw | 2 | GB/T65 M5×16 |
| A22 | HA106B0673 | Oil cup | 2 | φ19 |
| A23 | H7309B8001 | Arm bed | 1 | |
| A24 | H7312B8001 | Arm side cover (1) | 1 | |
| A25 | H7314B8001 | Screw | 8 | M5×8 |
| A26 | H7316B8001 | Screw | 1 | M4×6 |
| A27 | H7315B8001 | Cover | 1 | |
| A28 | H7318B8001 | Washer | 1 | |
| A29 | H7317B8001 | Screw | 1 | M4×4.5 |
| A30 | H7311B8001 | Supporter | 1 | |
| A31 | H5350B7101 | Hinge | 1 | |
| A32 | H415080160 | Screw | 8 | GB/T70.1 M8×16 |
| A33 | H415060080 | Screw | 1 | GB/T70.1 M6×8 |
| A34 | H7338B8001 | Holder | 1 | |
| A35 | H7313B8001 | Arm side cover (2) | 1 | |
| A36 | H3200B2100 | Screw | 1 | SM9/64(40)×6.5 |
| A37 | H3221B6819 | Spring stop | 1 | |
| A38 | H3221B6817 | Pin | 1 | |
| A39 | H3221B0686 | Screw | 1 | SM1/4(40)×14.5 |
| A40 | H4805C8001 | Thread tension stud | 1 | SM1/4(40)×8.5 |
| A41 | H2004J0067 | Screw | 1 | SM9/64(40)×7 |
| A42 | HA300C2030 | Screw | 1 | SM11/64(40)×8 |
| A43 | H3221B6810 | Nut | 1 | SM11/64(40)×3 |

## A. ARM BED AND ITS ACCESSORIES

| Fig. No. | Part No. | Description | Pcs. | Remarks |
|---|---|---|---|---|
| A44 | H3221B6818 | Thread releasing pin | 1 | |
| A45 | H2504C6510 | Screw | 2 | SM9/64(40)×3 |
| A46 | H3221B3142 | Tension releasing plate | 1 | |
| A47 | H2504C6511 | Tension releasing spring | 1 | |
| A48 | H3221B0681 | Porcelain cluct | 2 | |
| A49 | H3221B6820 | Mounting plate | 1 | |
| A50 | H3221B0682 | Pin | 2 | |
| A51 | H3221B0683 | Thread tension stud | 1 | SM11/64(40)×10 |
| A52 | HA112B0693 | Thread tension disc | 2 | |
| A53 | H3221B0684 | Spring | 1 | |
| A54 | HA710B0671 | Thumb nut | 1 | SM11/64(40)×6 |
| A55 | HA310B0705 | Thread tension disc | 2 | |
| A56 | HA310B0702 | Thread tension releasing disc | 1 | |
| A57 | HA310B0701 | Thumb nut revolution stopper | 1 | |
| A58 | HA115B7010 | Thumb nut complete | 1 | |
| A59 | HA115B0703 | Spring | 1 | |
| A60 | H4804C8001 | Screw | 1 | SM9/64(40)×2.9 |
| A61 | H32481B721 | Thumb nut | 1 | SM1/4(40)×4.5 |
| A62 | H32481BD21 | Plate complete | 1 | |
| A63 | H4713C8001 | Thread take-up spring | 1 | |

## B. FEEDING AND FEED LIFTING & ROTATING HOOK SHAFT MECHANISM

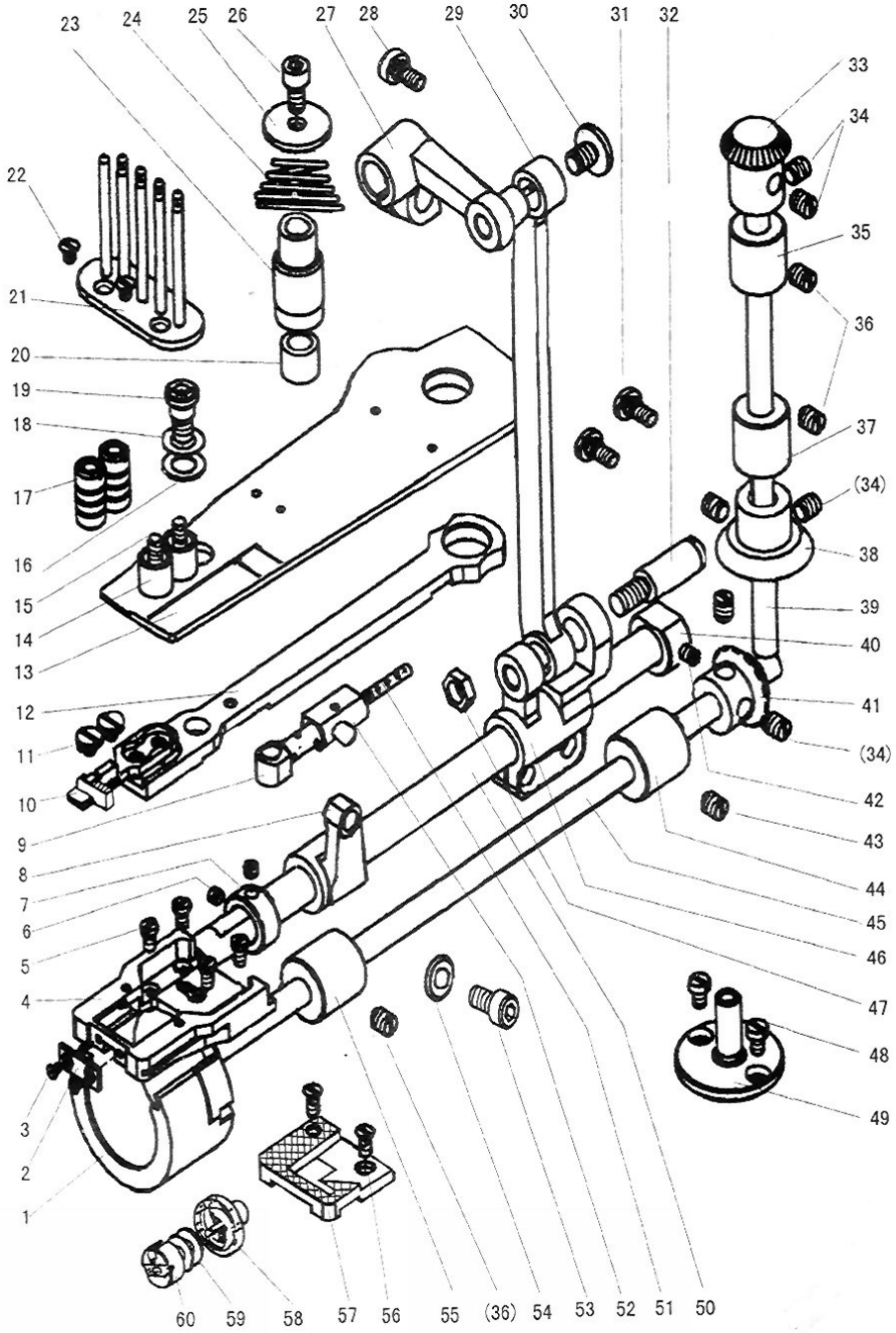

## B. FEEDING AND FEED LIFTING & ROTATING HOOK SHAFT MECHANISM

| Fig. No. | Part No. | Description | Pcs. | Remarks |
|---|---|---|---|---|
| B01 | H7310C8001 | Stop plate | 1 | |
| B02 | H7308C8001 | Hook positioner | 1 | |
| B03 | H7309C8001 | Screw | 2 | SM3/32(56)×2.1 |
| B04 | H7305C8001 | Fixing plate bracket for the needle plate | 1 | |
| B05 | H4913J8001 | Screw | 4 | SM9/64(40)×4.5 |
| B06 | H6039G8001 | Set screw | 2 | SM11/64(40)×3.8 |
| B07 | H7345C8001 | Feed rock shaft collar (left) | 1 | |
| B08 | H7347C8001 | Feed rock shaft crank (left) | 1 | |
| B09 | H7349C8001 | Feed rock shaft crank (left) joint | 1 | |
| B10 | H7321C8001 | Feed dog | 1 | |
| B11 | H7322C8001 | Screw | 2 | SM9/64(40)×4 |
| B12 | H7324C8001 | Feed bar | 1 | |
| B13 | H7332C8001 | Wiggle plate | 1 | |
| B14 | H7338C8001 | Bushing | 2 | |
| B15 | H7336C8001 | Screw | 2 | SM11/64(40)×14 |
| B16 | H7334C8001 | Washer | 1 | |
| B17 | H7337C8001 | Nut | 2 | SM11/64(40)×19 |
| B18 | H7335C8001 | Washer | 1 | |
| B19 | H7333C8001 | Pin | 1 | |
| B20 | H7328C8001 | Bearing for feed bar holder | 2 | HK0810 |
| B21 | H7339C7101 | Mounting plate complete | 1 | |
| B22 | H7342C8001 | Screw | 2 | SM9/64(40)×3 |
| B23 | H7325C8001 | Bushing for feed bar holder | 1 | |
| B24 | H7327C8001 | Spring for feed bar holder | 1 | |
| B25 | H7329C8001 | Washer | 1 | |
| B26 | H415050100 | Screw | 1 | GB/T70.1 M5×10 |
| B27 | H7355C8001 | Crank | 1 | |
| B28 | H415080160 | Screw | 1 | GB/T70.1 M8×16 |
| B29 | H7354C8001 | Connecting rod for feed lifting | 1 | |
| B30 | H7356C8001 | Screw | 1 | SM1/4(28)×9 |
| B31 | H7360C8001 | Screw | 2 | M6×13 |
| B32 | H7361C8001 | Pin | 1 | |
| B33 | HA113D2122 | Vertical shaft gear (upper) | 1 | |
| B34 | HA108C0663 | Set screw | 6 | SM1/4(40)×7 |
| B35 | H7312C8001 | Vertical shaft bushing (upper) | 1 | |
| B36 | H428060080 | Set screw | 3 | GB/T77 M6×8 |
| B37 | H7314C8001 | Vertical shaft bushing (lower) | 1 | |
| B38 | HA113D2222 | Vertical shaft gear (lower) | 1 | |
| B39 | H7311C8001 | Vertical shaft | 1 | |
| B40 | H7344C8001 | Feed rock shaft collar (right) | 1 | |
| B41 | HA113D2212 | Rotating hook shaft gear | 1 | |
| B42 | HA100B2110 | Set screw | 1 | SM11/64(40)×5.5 |
| B43 | H2404G0658 | Screw | 1 | SM11/64(32)×7.7 |

## B. FEEDING AND FEED LIFTING & ROTATING HOOK SHAFT MECHANISM

| Fig. No. | Part No. | Description | Pcs. | Remarks |
|---|---|---|---|---|
| B44 | H7316C8001 | Rotating hook shaft bushing (right) | 1 | |
| B45 | H7315C8001 | Rotating hook shaft | 1 | |
| B46 | H7359C8001 | Feed rock shaft crank (right) | 1 | |
| B47 | H7362C8001 | Nut | 1 | SM1/4(28)×3.7 |
| B48 | H7330C8001 | Screw | 2 | M4×6 |
| B49 | H7326C8001 | Feed bar holder | 1 | |
| B50 | H7343C8001 | Feed rock shaft | 1 | |
| B51 | H7353C8001 | Oil wick | 1 | |
| B52 | H7352C8001 | Bracket | 1 | |
| B53 | H415040080 | Screw | 1 | GB/T70.1 M4×8 |
| B54 | H7351C8001 | Washer | 1 | |
| B55 | H7317C8001 | Rotating hook shaft bushing (left) | 1 | |
| B56 | H7307C8001 | Screw | 2 | SM9/64(40)×6 |
| B57 | H7306C8001 | Needle plate | 1 | |
| B58 | H3004E0065 | Rotating hook | 1 | GC2698-1 |
| B58 | H7365C8001 | Rotating hook | 1 | GC2698-1B |
| B59 | HA100E2170 | Bobbin | 1 | GC2698-1 |
| B59 | H7363C8001 | Bobbin | 1 | GC2698-1B |
| B60 | H3005E0066 | Bobbin sheath | 1 | GC2698-1 |
| B60 | H7364C8001 | Bobbin sheath | 1 | GC2698-1B |

## C. ARM SHAFT MECHANISM

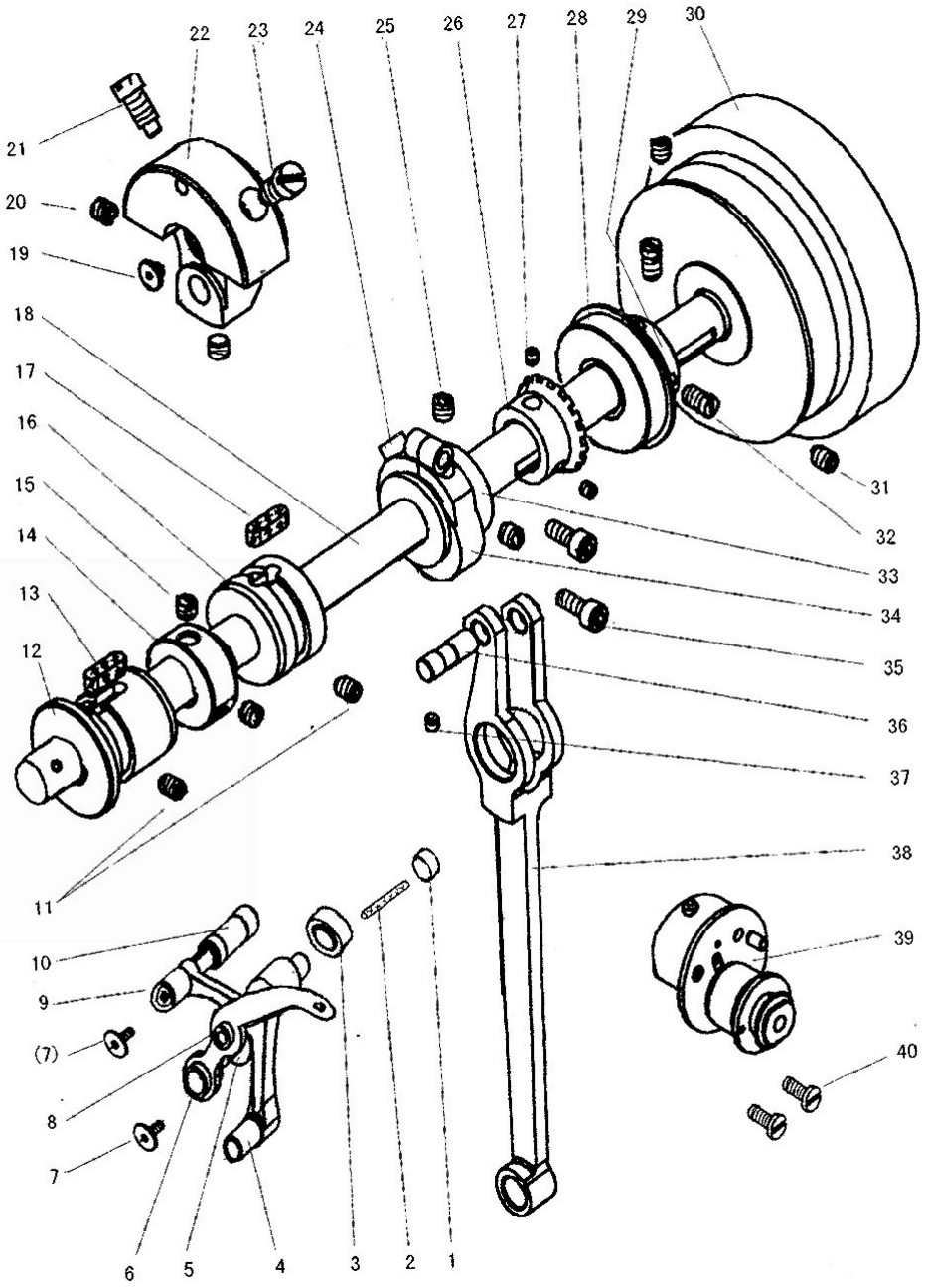

## C. ARM SHAFT MECHANISM

| Fig. No. | Part No. | Description | Pcs. | Remarks |
|---|---|---|---|---|
| C01 | H7354D8001 | Rubber plug | 1 | |
| C02 | H7355D8001 | Oil wick | 1 | |
| C03 | H7358D8001 | Bearing | 1 | K9×12×13T2 |
| C04 | H7352D8001 | Link | 1 | |
| C05 | H7353D8001 | Crank | 1 | |
| C06 | H7348D8001 | Thread take-up lever | 1 | |
| C07 | H7351D8001 | Screw | 2 | SM9/64(40)×7 |
| C08 | H7359D8001 | Bearing | 1 | K7×10×8T2 |
| C09 | H7349D8001 | Link for thread take-up | 1 | |
| C10 | H7350D8001 | Pin | 1 | |
| C11 | H428060080 | Screw | 2 | GB/T77 M6×8 |
| C12 | H7320D8001 | Arm shaft bushing (left) | 1 | |
| C13 | H7321D8001 | Felt | 1 | |
| C14 | H7324D8001 | Wheel for bobbin winder | 1 | |
| C15 | HA108C0662 | Screw | 2 | SM1/4(40)×6 |
| C16 | H7322D8001 | Arm shaft bushing (middle) | 1 | |
| C17 | H7323D8001 | Felt | 1 | |
| C18 | H7318D8001 | Arm shaft | 1 | |
| C19 | H7319D8001 | Arm shaft Plug | 1 | |
| C20 | HA307C0662 | Screw | 2 | SM1/4(40)×6 |
| C21 | HA100C2070 | Screw | 1 | SM9/32(28)×10 |
| C22 | H7357D8001 | Needle bar crank | 1 | |
| C23 | HA100C2060 | Screw | 1 | SM9/32(28)×13 |
| C24 | H7309D8001 | Bracket for feed cam crank | 1 | |
| C25 | HA108C0663 | Screw | 2 | SM1/4(40)×7 |
| C26 | HA113D2112 | Bevel gear for arm shaft | 1 | |
| C27 | HA108C0663 | Screw | 2 | SM1/4(40)×7 |
| C28 | H3208H0661 | Bearing | 1 | 6004ZZNR |
| C29 | H5336C8001 | Arm shaft bushing (right) | 1 | |
| C30 | H2000C2040 | Balance wheel | 1 | |
| C31 | HA110D0672 | Screw | 2 | SM15/64(28)×12 |
| C32 | HA113F0684 | Screw | 2 | SM15/64(28)×8.5 |
| C33 | H7305D8001 | Feed cam | 1 | |
| C34 | H7308D8001 | Cover for feed cam crank | 1 | |
| C35 | H415050120 | Screw | 2 | GB/T70.1 M5×12 |
| C36 | H7311D8001 | Pin | 1 | |
| C37 | H428040040 | Screw | 1 | GB/T77 M4×4 |
| C38 | H7313D8001 | Connecting rod for feed cam crank | 1 | |
| C39 | H7325D7101 | Bobbin winder assay | 1 | |
| C40 | H401040060 | Screw | 2 | GB/T65 M4×6 |

## D. STITCH REGULATOR MECHANISM

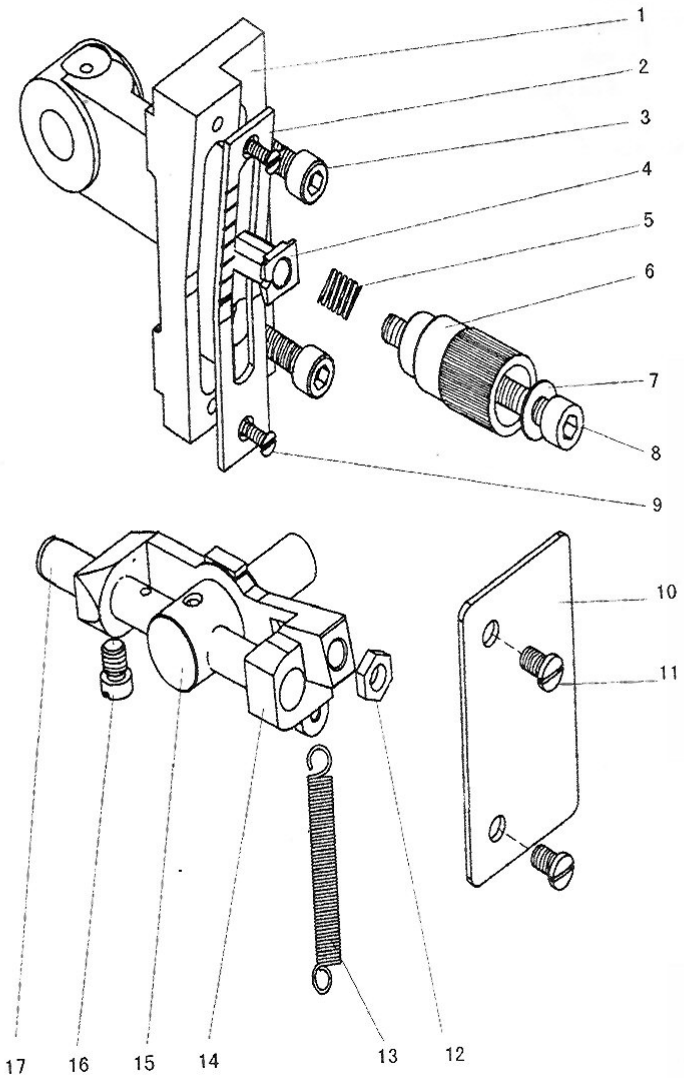

## D. STITCH REGULATOR MECHANISM

| Fig. No. | Part No. | Description | Pcs. | Remarks |
|---|---|---|---|---|
| D01 | H7305E8001 | Bracket for stitch length plate | 1 | |
| D02 | H7307E8001 | Stitch length plate | 1 | |
| D03 | H415060160 | Screw | 2 | GB/T70.1 M6×16 |
| D04 | H7315E8001 | Guide bushing | 1 | |
| D05 | H7313E8001 | Spring | 1 | |
| D06 | H7310E7101 | Stitch length regulating nut assay | 1 | |
| D07 | H7314E8001 | Washer | 1 | |
| D08 | H7312E8001 | Stud | 1 | M6×60 |
| D09 | H4100F2070 | Screw | 2 | SM9/64(40)×7 |
| D10 | H7325E8001 | Cover | 1 | |
| D11 | H7326E8001 | Screw | 2 | M5×7.5 |
| D12 | H7316E8001 | Feed regulator screw bar | 1 | |
| D13 | H7323E8001 | Spring | 1 | |
| D14 | H7318E8001 | Setting frame | 1 | |
| D15 | H7324E8001 | Guide bushing | 1 | |
| D16 | H7322E8001 | Screw | 1 | SM15/64(40)×7.5 |
| D17 | H7319E7101 | Pin | 1 | |

## E. PRESSER FOOT MECHANISM

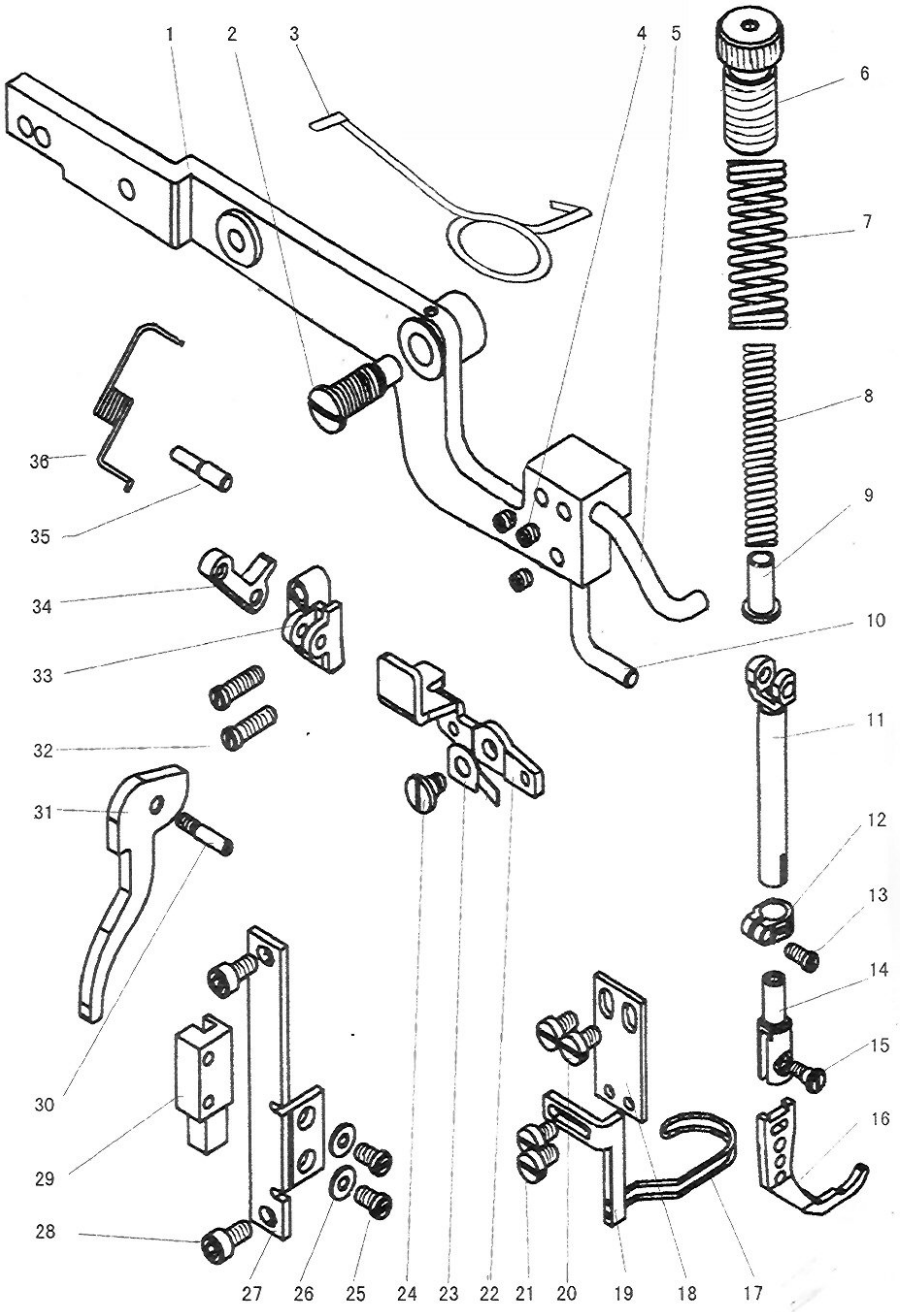

## E. PRESSER FOOT MECHANISM

| Fig. No. | Part No. | Description | Pcs. | Remarks |
|---|---|---|---|---|
| E01 | H7307F8001 | Knee lifter lever | 1 | |
| E02 | H7311F8001 | Screw | 1 | M8×10 |
| E03 | H7312F8001 | Spring | 1 | |
| E04 | H7310F8001 | Screw | 3 | M5×5 |
| E05 | H7308F8001 | Stop bar for knee lifter lever | 1 | |
| E06 | H7330F8001 | Thumb screw | 1 | SM5/8″(28)×39 |
| E07 | H7331F8001 | Spring | 1 | |
| E08 | H7332F8001 | Spring | 1 | |
| E09 | H7333F8001 | Pipe | 1 | |
| E10 | H7309F8001 | Stop bar for knee lifter lever | 1 | |
| E11 | H7324F8001 | Vibrating presser bar | 1 | |
| E12 | H7326F8001 | Connecting stud for vibrating presser bar | 1 | |
| E13 | H7327F8001 | Screw | 1 | M4×8 |
| E14 | H7325F8001 | Connecting stud for walking foot | 1 | |
| E15 | H7329F8001 | Screw | 1 | SM9/64(40)×5.8 |
| E16 | H7328F8001 | Walking foot | 1 | |
| E17 | H7335F8001 | Walking foot guard cover | 1 | |
| E18 | H7336F8001 | Walking foot guard cover plate | 1 | |
| E19 | H7337F8001 | Walking foot guard cover bracket | 1 | |
| E20 | H7342F8001 | Screw | 2 | M5×8 |
| E21 | H7343F8001 | Screw | 2 | M4×6 |
| E22 | H7320F8001 | Thread releasing disc | 1 | |
| E23 | H7321F8001 | Spring | 1 | |
| E24 | H7322F8001 | Screw | 1 | M5×4 |
| E25 | H454040100 | Screw | 2 | GB66016 M4×10 |
| E26 | H005001040 | Washer | 2 | GB/T97.1 4 |
| E27 | H7341F8001 | Mounting frame | 1 | |
| E28 | H415050100 | Screw | 2 | GB/T70.1 M5×10 |
| E29 | H7339F8001 | Walking foot guide plate | 1 | |
| E30 | H7305F8001 | Presser bar lifter | 1 | M4×8 |
| E31 | H7304F8001 | Presser bar lifter | 1 | |
| E32 | H7315F8001 | Screw | 2 | M5×16 |
| E33 | H7314F8001 | Bracket for knee lifter lever | 1 | |
| E34 | H7316F8001 | Knee lifter lever crank | 1 | |
| E35 | H7317F8001 | Pin | 1 | |
| E36 | H7318F8001 | Spring | 1 | |

## F. NEEDLE BAR FEEDING MECHANISM (1)

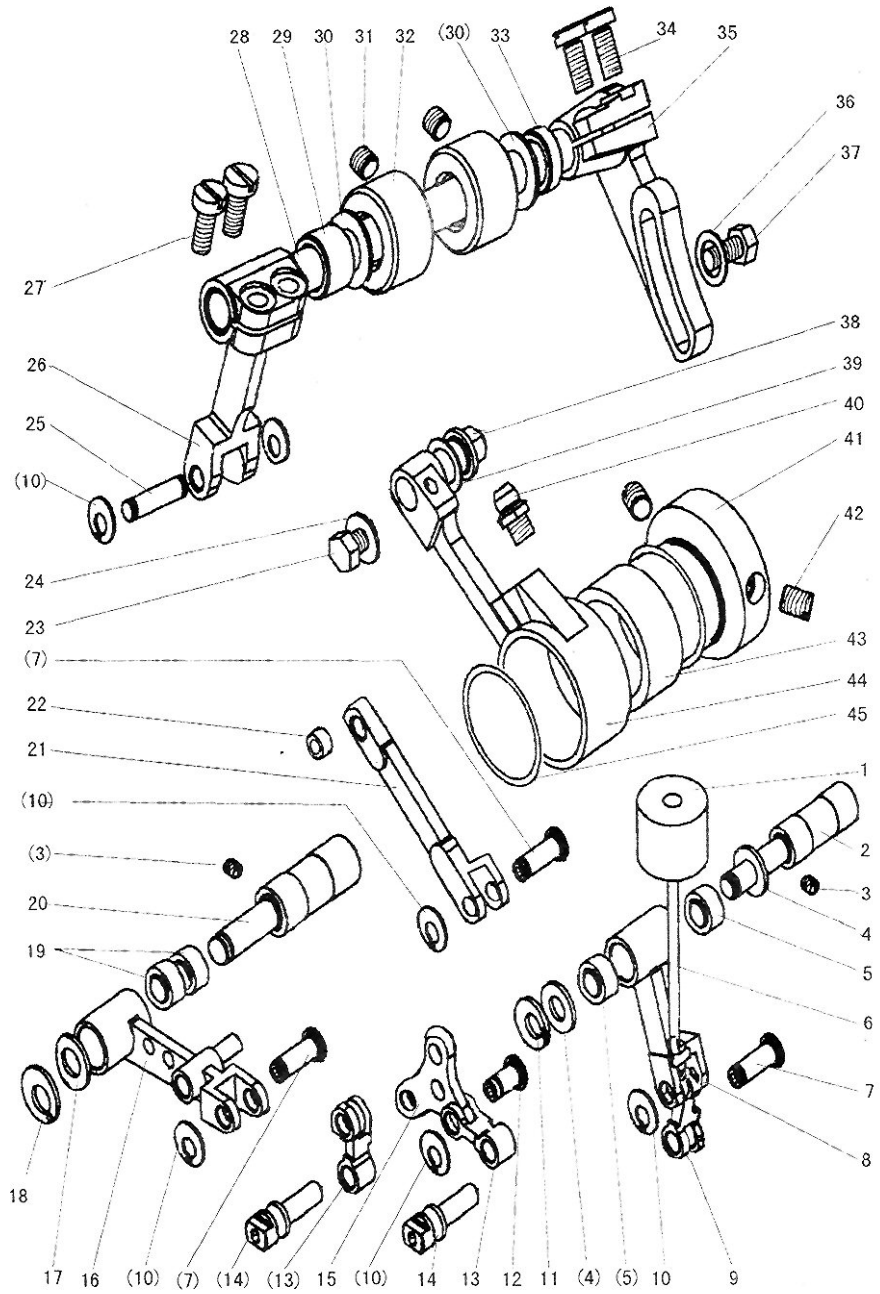

## F. NEEDLE BAR FEEDING MECHANISM (2)

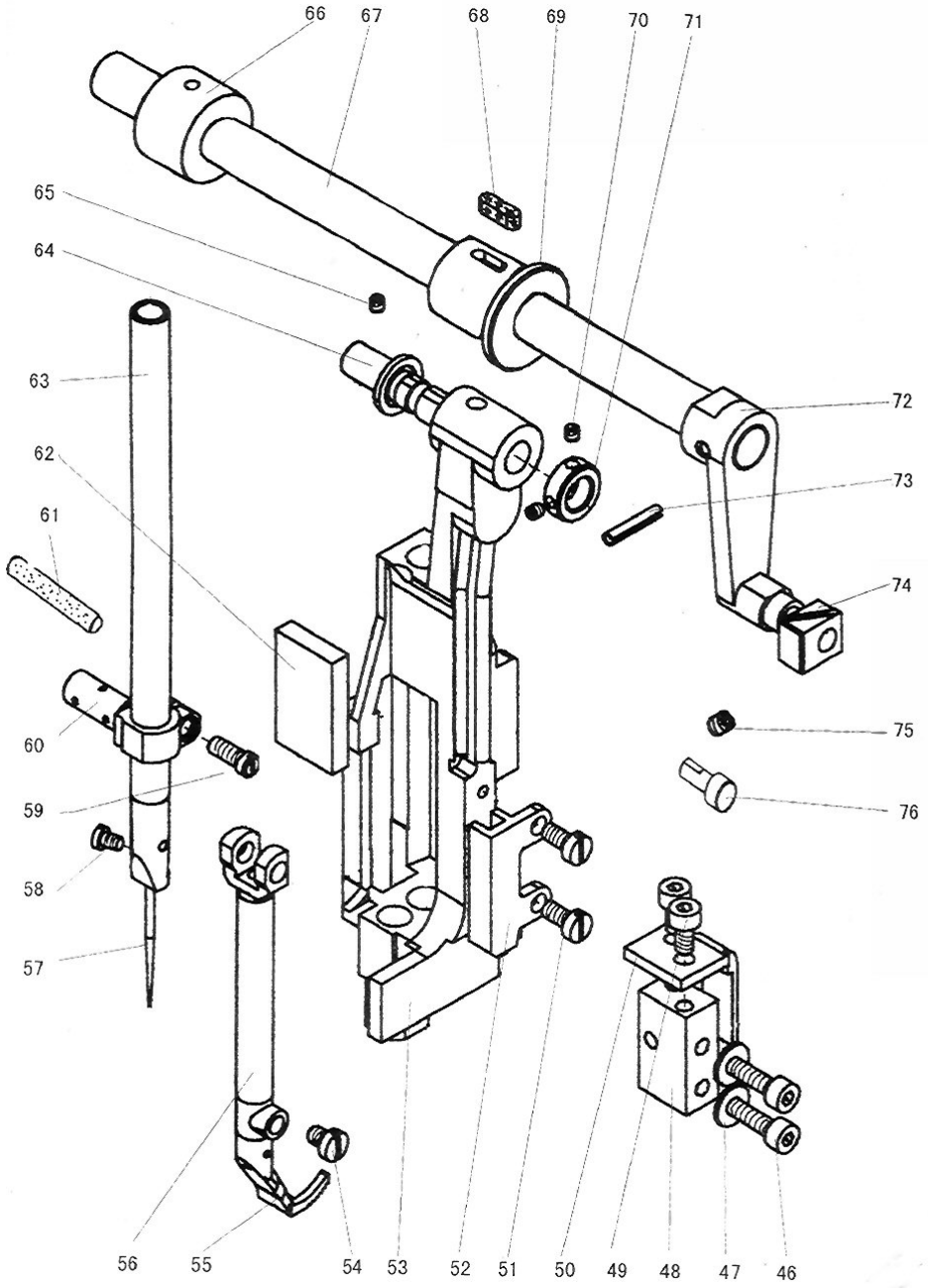

## F. NEEDLE BAR FEEDING MECHANISM

| Fig. No. | Part No. | Description | Pcs. | Remarks |
|---|---|---|---|---|
| F01 | H7359G8001 | Felt | 1 | |
| F02 | H7361G8001 | Pin | 1 | |
| F03 | H428060080 | Screw | 2 | GB/T77 M6×8 |
| F04 | H7362G8001 | Washer | 2 | |
| F05 | H7365G8001 | Bearing | 2 | K6×9×8T2 |
| F06 | H7356G7101 | Spring guide bar | 1 | |
| F07 | H7337G8001 | Pin | 3 | |
| F08 | H7360G8001 | Connecting rod | 1 | |
| F09 | H7355G8001 | Connecting rod | 1 | |
| F10 | H007009050 | Stop ring | 6 | GB/T894.1 5 |
| F11 | H007009060 | Stop ring | 1 | GB/T894.1 6 |
| F12 | H7335G8001 | Pin | 1 | |
| F13 | H7333G8001 | Connecting rod | 2 | |
| F14 | H7334G8001 | Slide block | 2 | |
| F15 | H7336G8001 | Crank | 1 | |
| F16 | H7338G7101 | Connecting rod complete | 1 | |
| F17 | H7342G8001 | Washer | 1 | |
| F18 | H007009070 | Stop ring | 1 | GB/T894.1 7 |
| F19 | H7359D8001 | Bearing | 2 | K7×10×8T2 |
| F20 | H7341G8001 | Pin | 1 | |
| F21 | H7343G8001 | Connecting rod | 1 | |
| F22 | H7376G8001 | Bearing | 1 | K5×8×8T2 |
| F23 | H453050080 | Screw | 1 | GB30004 M5×8 |
| F24 | H7314G8001 | Washer | 1 | |
| F25 | H7344G8001 | Pin | 1 | |
| F26 | H7346G8001 | Connecting rod | 1 | |
| F27 | H7377G8001 | Screw | 2 | M5×12 |
| F28 | H7347G8001 | Upper feed lifting rock shaft | 1 | |
| F29 | H7352G8001 | Bushing (left) | 1 | |
| F30 | H7353G8001 | Washer (left) | 2 | |
| F31 | H428060050 | Screw | 2 | GB/T77 M6×5 |
| F32 | H7348G7101 | Bushing for upper feed lifting rock shaft | 2 | |
| F33 | H7354G8001 | Bushing (right) | 1 | |
| F34 | H7312G8001 | Screw | 2 | M5×11.7 |
| F35 | H7311G8001 | Regulating crank | 1 | |
| F36 | H005001050 | Washer | 1 | GB/T97.1 5 |
| F37 | H102050100 | Screw | 1 | GB/T5781 M5×10 |
| F38 | H7313G8001 | Pin | 1 | |
| F39 | H7315G8001 | Washer | 1 | |
| F40 | HD00001060 | Oil cup | 1 | JB/T7940.1 M6 |
| F41 | H7305G8001 | Cam for presser foot lifting | 1 | |
| F42 | H455060080 | Screw | 2 | GB74031 M6×8 |
| F43 | H7316G8001 | Bearing | 1 | K24×29×13 |

## F. NEEDLE BAR FEEDING MECHANISM

| Fig. No. | Part No. | Description | Pcs. | Remarks |
|---|---|---|---|---|
| F44 | H7309G8001 | Connecting rod | 1 | |
| F45 | H7308G8001 | Stop ring | 2 | |
| F46 | H415040160 | Screw | 2 | GB/T70.1 M4×16 |
| F47 | H005001040 | Washer | 2 | GB/T97.1 4 |
| F48 | H7364G8001 | Guide plate for needle bar rock frame | 1 | |
| F49 | H415040080 | Screw | 2 | GB/T70.1 M4×8 |
| F50 | H7366G8001 | Fixing plate | 1 | |
| F51 | H7378G8001 | Screw | 2 | M4×8 |
| F52 | H7368G8001 | Guide plate for slide block | 1 | |
| F53 | H7320G8001 | Needle bar rock frame | 1 | |
| F54 | H7331G8001 | Screw | 1 | M4×5.5 |
| F55 | H7330G8001 | Presser foot | 1 | |
| F56 | H7329G8001 | Presser bar | 1 | |
| F57 | H7317G8001 | Needle | 1 | DP×35LR 14#-16# |
| F58 | H3204D6510 | Screw | 1 | SM1/8(44)×4 |
| F59 | H7327G8001 | Screw | 1 | M4×10 |
| F60 | H7326G8001 | Needle bar connecting stud | 1 | |
| F61 | H7328G8001 | Oil wick | 1 | |
| F62 | H7321G8001 | Felt | 1 | |
| F63 | H7324G8001 | Needle bar | 1 | |
| F64 | H7322G8001 | Pin for rock frame | 1 | |
| F65 | H428050080 | Screw | 1 | GB/T77 M5×8 |
| F66 | H7373G8001 | Bushing | 1 | |
| F67 | H7370G8001 | Needle bar rock shaft , | 1 | |
| F68 | H7367G8001 | Felt | 1 | |
| F69 | H7371G8001 | Bushing | 1 | |
| F70 | H456030030 | Screw | 2 | GB74001 M3×3 |
| F71 | H7323G8001 | Collar | 1 | |
| F72 | H7372G8001 | Needle bar rock shaft crank | 1 | |
| F73 | H602030160 | Pin | 1 | GB/T117 3×16 (A型) |
| F74 | H7374G8001 | Square block | 1 | |
| F75 | H7310F8001 | Screw | 1 | M5×5 |
| F76 | H7375G8001 | Spring stop | 1 | |

## G. ACCESSORIES

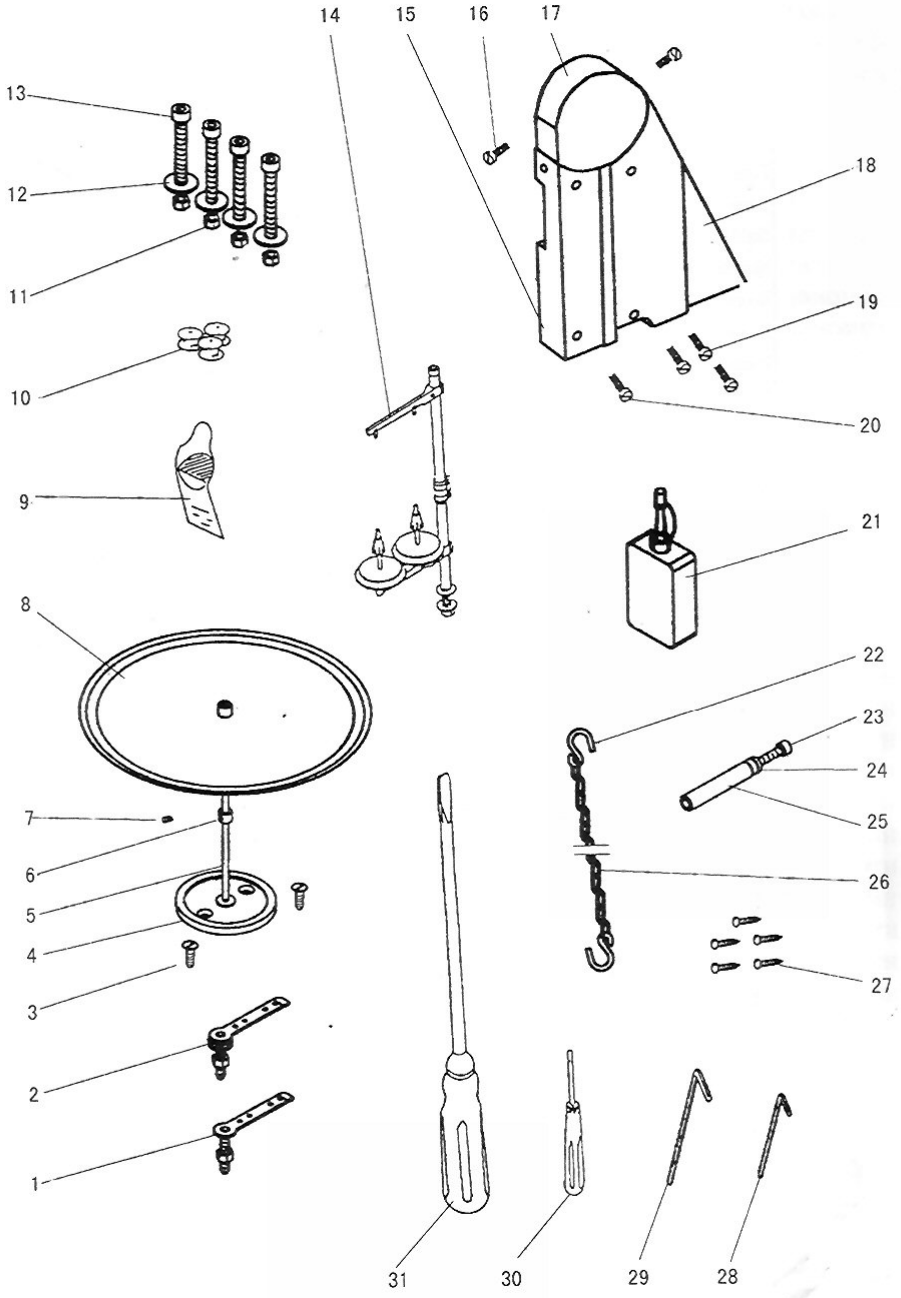

## G. ACCESSORIES

| Fig. No. | Part No. | Description | Pcs. | Remarks |
|---|---|---|---|---|
| G01 | H7308H7101 | Thread stand assay | 1 | |
| G02 | H7311H7101 | Bobbin winder assay | 1 | |
| G03 | H801055250 | Wood screw | 2 | GB/T99 5.5×25 |
| G04 | H7326H8001 | Seat | 1 | |
| G05 | H7323H8001 | Shelf | 1 | |
| G06 | H7324H8001 | Collar | 1 | |
| G07 | H7325H8001 | Screw | 1 | SM9/64(40)×3 |
| G08 | H7320H7101 | Plate complete | 1 | |
| G09 | H7317G8001 | Needle | 4 | DP×35LR 14#-16# |
| G10 | HA100E2170 | Bobbin | 3 | |
| G11 | H003002080 | Nut | 4 | GB/T6170 M8 |
| G12 | H005006080 | Washer | 4 | GB/T96 8 |
| G13 | H415080600 | Screw | 4 | GB/T70.1 M8×60 |
| G14 | HA200J2030 | Thread guide | 1 | GXJ-2 |
| G15 | H7328H8001 | Belt cover (left) | 1 | |
| G16 | H2000O0360 | Screw | 2 | SM11/64(40)×6 |
| G17 | H6307L8001 | Belt cover (upper) | 1 | |
| G18 | H7327H8001 | Belt cover (right) | 1 | |
| G19 | HA300J2280 | Screw | 3 | SM15/64(28)×8 |
| G20 | H2400K0160 | Screw | 1 | SM15/64(28)×8 |
| G21 | H2004O0069 | Oil tank | 1 | |
| G22 | HPG100E202 | Pothook | 2 | |
| G23 | H415060800 | Screw | 1 | GB/T70.1 M6×80 |
| G24 | H007013090 | Stop ring | 2 | GB/T896 9 |
| G25 | H7315H8001 | Bushing | 1 | |
| G26 | HPG100E203 | Chain | 1 | L=950 |
| G27 | H801045200 | Wood screw | 5 | GB/T99 4.5×20 |
| G28 | HS68990206 | Sockt wrench | 1 | 5mm |
| G29 | HS68990207 | Sockt wrench | 1 | 6mm |
| G30 | HA300J2210 | Screw driver (small) | 1 | |
| G31 | HA300J2070 | Screw driver (larger) | 1 | |